INSTRUCTIONS

-J02046 REV. 02-20-04

Kit Number 62920-00, 62920-00A

CHROME FRONT FUEL TANK MOUNTING HARDWARE

General

This kit is designed for installation on all 1998 and later Touring model motorcycles.

This kit consists of the following:

QTY	DESCRIPTION	PART NUMBER
2	Screw, chrome	26809-04
2	Washer, chrome	6384

Installation

NOTES

A Service Manual for your motorcycle is available at your Harley-Davidson Dealer.

When performing the following procedures, remove and replace hardware one side at a time to retain fuel tank alignment.

1. See Figure 1. Remove right side fuel tank front mounting screw and flat washer.
2. Apply Loctite® 243 (blue, not included) to threads of screw from kit and install chrome front washer and screw. Tighten screw to 19 ft-lbs (26 Nm).

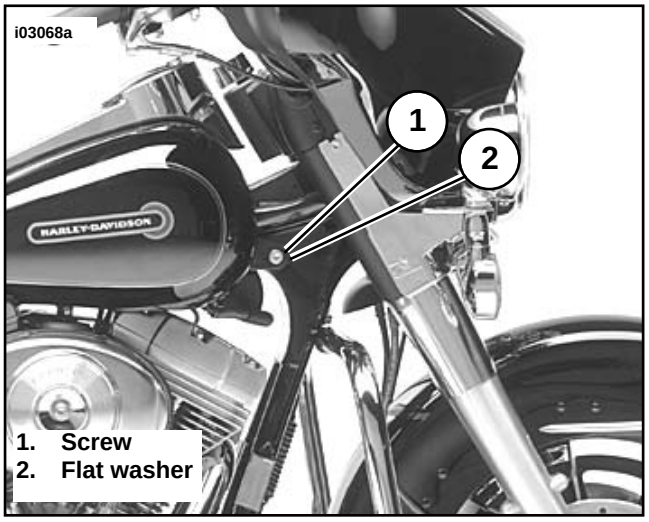

Figure 1. Fuel Tank Front Mount

3. Repeat Steps 1 and 2 for the opposite side.

INSTRUCTIONS

-J02046 REV. 02-20-04

Kit Number 62920-00, 62920-00A

CHROME FRONT FUEL TANK MOUNTING HARDWARE

General

This kit is designed for installation on all 1998 and later Touring model motorcycles.

This kit consists of the following:

QTY	DESCRIPTION	PART NUMBER
2	Screw, chrome	26804-04
2	Washer, chrome	6384

Installation

NOTES

A Service Manual for your motorcycle is available at your Harley-Davidson Dealer.

When performing the following procedures, remove and replace hardware one side at a time to retain fuel tank alignment.

1. See Figure 1. Remove right side fuel tank front mounting screw and flat washer.
2. Apply Loctite® 243 (blue, not included) to threads of screw from kit and install chrome front washer and screw. Tighten screw to 19 ft-lbs (26 Nm).

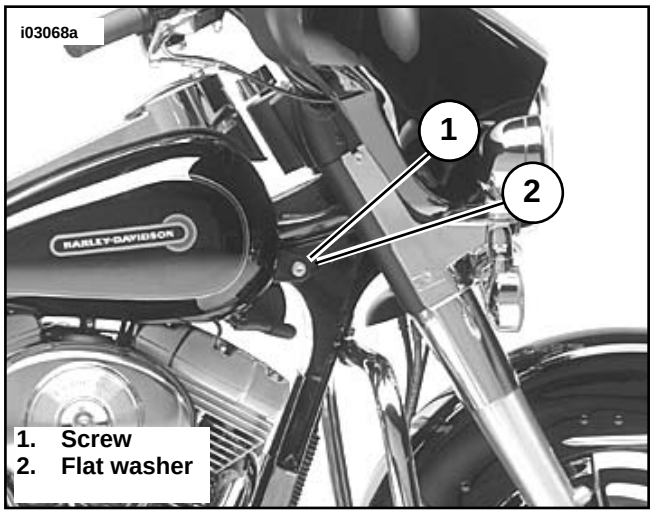

Figure 1. Fuel Tank Front Mount

3. Repeat Steps 1 and 2 for the opposite side.